PUBLIC MEETING MAP

PROJECT: 50135.1.FS1
TIP PROJECT: I-5719 /U-5800
FA PROJECT: NHPP-085-1(121)27

GASTON COUNTY

US 321 TO NC 273. WIDEN TO EIGHT LANES.
SR 2200 (COX ROAD) INTERCHANGE.
CONSTRUCT INTERCHANGE IMPROVEMENTS.

OCTOBER 2023

SHEET 4 OF 12

LEGEND

- BUILDINGS
- EXISTING RIGHT OF WAY
- PROPOSED RIGHT OF WAY
- PROPOSED EASEMENTS (DRAINAGE, CONSTRUCTION, AND UTILITY)
- EXISTING ROADWAY
- EXISTING ROADWAY TO BE REMOVED
- EXISTING ROADWAY TO BE RESURFACED
- TEMPORARY ROADWAY / DETOURS
- PROPOSED ROADWAY
- PROPOSED STRUCTURES, ISLAND, CURB AND GUTTER
- EXISTING STRUCTURES, ISLAND, CURB AND GUTTER TO BE RETAINED
- EXISTING STRUCTURES TO BE REMOVED
- LAKES, RIVER, STREAMS AND PONDS
- PROPOSED SIDEPATH/GREENWAY
- RAILROAD RIGHT OF WAY
- EXISTING UTILITY EASEMENT
- CEMETERIES
- PROPOSED CONTROL OF ACCESS
- EXISTING CONTROL OF ACCESS
- PRESENT ADT / FUTURE ADT
- PROPERTY LINES
- EXISTING TRAFFIC SIGNAL TO BE REMOVED
- EXISTING TRAFFIC SIGNAL
- PROPOSED TRAFFIC SIGNAL
- HISTORIC PROPERTY BOUNDARY
- POTENTIAL NOISE ABATEMENT AREA
- PARKS
- WETLAND
- CITY AND TOWN LINES
- FUTURE ROADWAY
- TRANSMISSION TOWER
- PROPOSED RAILROAD
- STUDY BOUNDARY (NRTR)

UTILITY INFORMATION

TO PROVIDE GREATER VISUAL CLARITY, EXISTING AND PROPOSED UTILITIES ARE NOT SHOWN ON THESE MAPS OR ON OTHER DRAWINGS. THE UTILITY INFORMATION SHOWN ON THESE MAPS IS LIMITED TO LOCATIONS OF MAJOR EXISTING AND POTENTIAL UTILITY EASEMENTS. THE DESIGNS SHOWN ON THESE MAPS, INCLUDING UTILITY EASEMENTS, ARE PRELIMINARY AND ARE SUBJECT TO CHANGE.

DESIGN DATA

FUNCTIONAL CLASS.	= INTERSTATE
DESIGN SPEED	= 65 MPH
MAX. SUPERELEV.	= 0.08
DATE OF ORTHOPHOTOGRAPHY	= FEB. 2020

FULL CONTROL OF ACCESS

DEFINED AS A CONNECTION TO A FACILITY PROVIDED ONLY VIA RAMPS AND INTERCHANGES. ALL CROSS-STREETS ARE GRADE SEPARATED. NO PRIVATE DRIVEWAY CONNECTIONS ARE ALLOWED.

DRIVEWAY NOTE

DRIVEWAY LOCATION AND SIZE ARE PRELIMINARY AND ARE SUBJECT TO CHANGE BASED ON FINAL DESIGNS.

INCOMPLETE PLANS
DO NOT USE FOR R/W ACQUISITION

PRELIMINARY PLANS
DO NOT USE FOR CONSTRUCTION

50' (ENGLISH)

INTERCHANGE QUADRANT LABELS

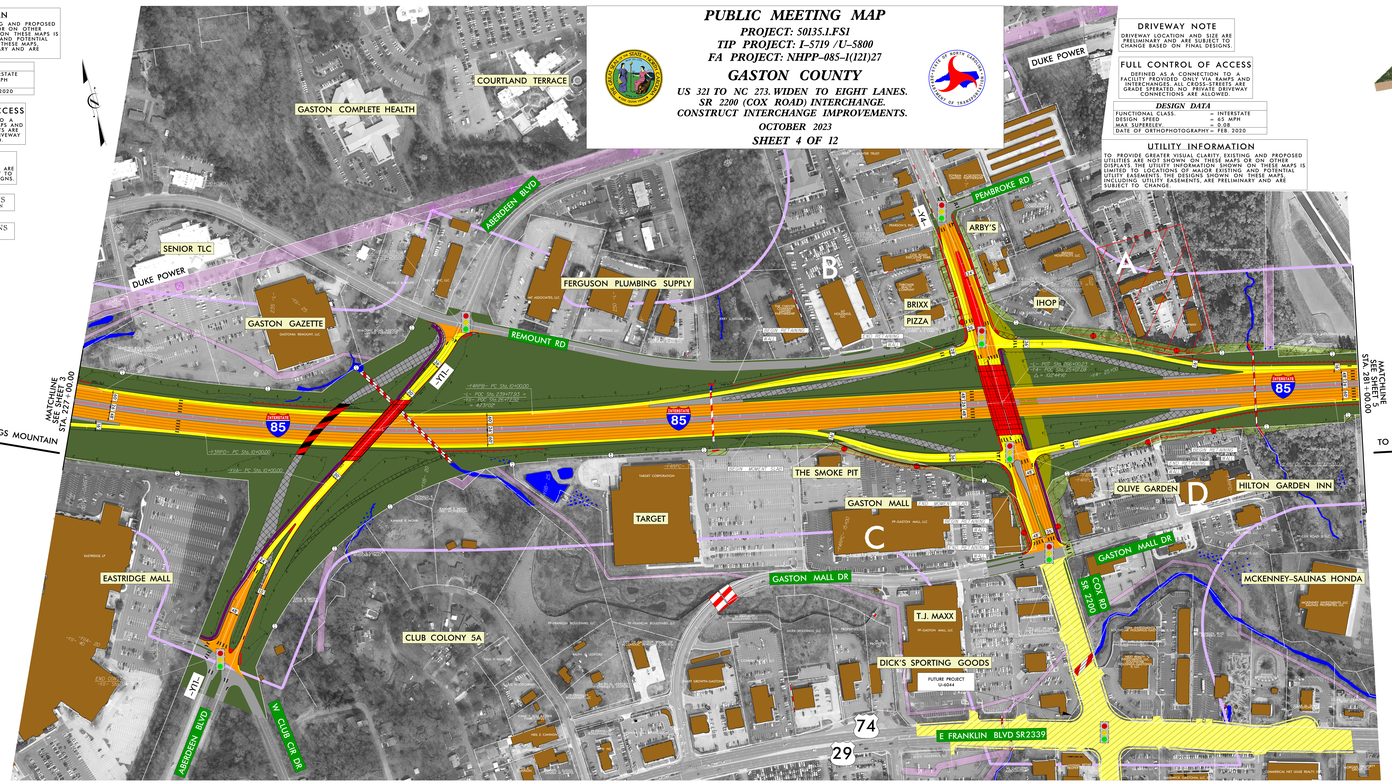

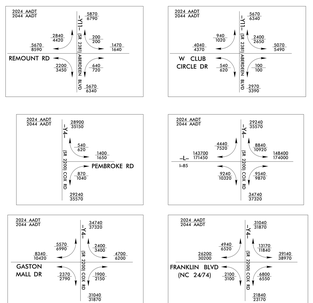

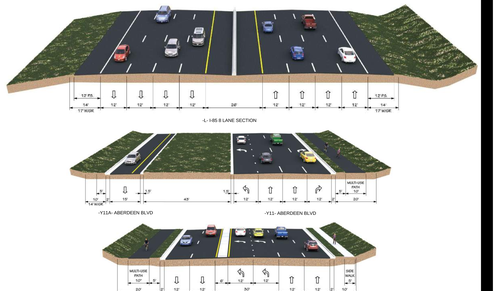

PUBLIC MEETING MAP
PROJECT: 50135.1.FS1
TIP PROJECT: I-5719 /U-5800
FA PROJECT: NHPP-085-1(121)27
GASTON COUNTY
US 321 TO NC 273. WIDEN TO EIGHT LANES.
SR 2200 (COX ROAD) INTERCHANGE.
CONSTRUCT INTERCHANGE IMPROVEMENTS.
OCTOBER 2023
SHEET 4 OF 12